CARERAY
DIGITAL MEDICAL

CareVision® 750SR

Wireless Flat Panel Detector

Unbreakable

Flexible TFT & IP67

High Resolution Capability

77μm pixel design

Specialized

Narrow edge

Dynamic Mode

Real-time imaging

Specifications

Sensor				
Panel	Flexible TFT			
Scintillator	GOS			
Active Area	236.5 mm x 313.5 mm			
Image Matrix Size	4096 x 3072			
Pixel Pitch	77 μm			
A/D Conversion	16 bits			
Image Performance				
DQE(Typical)	16% @(0 Lp/mm)	13% (@0.5 Lp/mm)	12% (@1 Lp/mm)	12% (@1.5 Lp/mm)
	10% @(2 Lp/mm)	10% (@2.5Lp/mm)	9% (@3 Lp/mm)	
MTF(Typical)	75% (@1 Lp/mm)	51% (@2 Lp/mm)	33% (@3 Lp/mm)	
Spatial Resolution	6.49 Lp/mm			
Max. Linear Dose	1493.5 uGy			
Dynamic Range	84.33 dB			
Work Mode				
	Binning	Image Matrix Size	Fps	
Static	1×1	4096×3072	N/A	
Dynamic	1×1	4096×3072	2.5 fps	
Dynamic	2×2	2048×1536	9 fps	
Dynamic	4×4	1024×768	27 fps	
Communication				
Data Interface	Gigabit/Wireless			
Trigger Type	Software Trigger / Dynamic Internal			
Environmental				
Temperature Range	5℃ ~ 35℃ (Operating), -20℃ ~ 55℃ (Storage)			
Humidity Range	30% ~ 75% RH (Non-condensing) (Operating), 10% ~ 90% RH (Non-condensing) (Storage)			
Mechanical				
Weight	~4.68 kg (without battery)			
Size	348 mm x 384.8 mm x 24 mm (without handle)			
Housing	Anodized Aluminum Alloy Carbon Fiber			
Energy Range	20-320kV			
Power				
Power Consumption	Max. 48W			
Power supply	100-240V			
Frequency	50/60Hz			

Dimensions

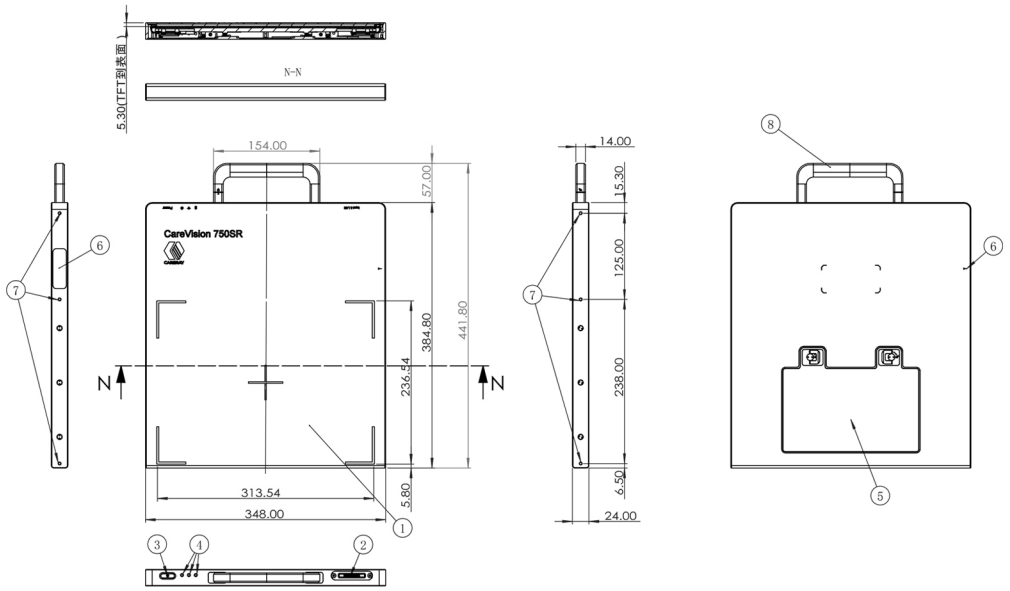

① Active area (10" X 12")
② Power & Network Interface
③ Power Button
④ Working Stat (LED light)
⑤ Rechargeable Battery
⑥ Wifi Antenna
⑦ Mounting Holes: M4-6H
⑧ Removeable Handle

This document cannot be considered to be a contractual specification
Technical specifications are subject to change without prior notice.
©2025CareRay Digital Medical Technology Co.,Ltd. V.25.2

CareRay, USA
2352 Walsh Ave., Santa Clara, CA 95051, USA.
+1(408)418-3985 careray.com
globalsales@careray.com

CARERAY DIGITAL MEDICAL